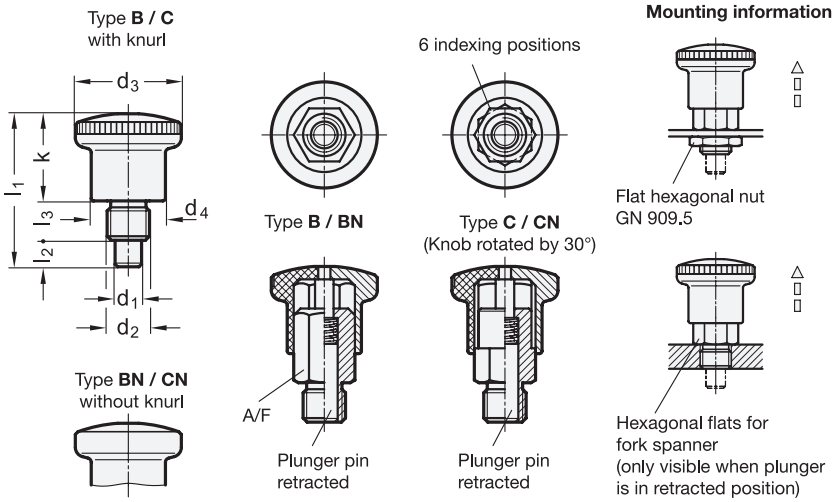

Inox Stainless Steel

3 Type

- **B** Without rest position with plastic knob
- **BN** Without rest position with stainless steel knob
- **C** With rest position with plastic knob
- **CN** With rest position with stainless steel knob

1 d_1 Pin h9 Bore $^{+0,03}_{+0,08}$	2 d_2		d_3	d_4	l_1	l_2 min.	l_3	k	A/F	Spring load in N ≈ Initial	End
4	M 8	M 8 x 1	21	15	27,5	5	6	16,5	10	4	12
5	M 10	M 10 x 1	25	18	34	6	8	20	12	6	16
6	M 10	M 10 x 1	25	18	34	6	8	20	12	6	16
6	M 12	M 12 x 1,5	28	20	40,5	7	10	23,5	14	10	23
7	M 12	M 12 x 1,5	28	20	40,5	7	10	23,5	14	10	23
8	M 16	M 16 x 1,5	33	23	47,5	10	12	25,5	17	11	35
10	M 16	M 16 x 1,5	33	23	47,5	10	12	25,5	17	11	35

Specification

- Guide / Plunger pin
  Stainless steel AISI 303
- Pressure spring
  Stainless steel AISI 301
- Knob type B and C
  Plastic (Polyamide PA)
  - Black, matte finish
  - Not removable
- Knob type BN / CN
  Stainless steel AISI CF-8
  - Matte shot-blasted
  - Not removable
- *Load Rating Information → Page 2132*
- *ISO Fundamental Tolerances → Page 2151*
- *Plastic Characteristics → Page 2158*
- *Stainless Steel Characteristics → Page 2166*
- RoHS

On request

- With red knob
- With inch threads

Information

Stainless steel mini indexing plungers GN 822.7 are distinguished for their small dimensions.

Based on the principle of the GN 822 mini indexing plungers, this model combines their clever type of construction with a complete series of all current sizes of bolts and threads. They provide a reasonably priced alternative to the GN 607 / GN 607.1 indexing plungers of the appropriate sizes.

Pulling the plunger pin will release the hexagon nut which can then be tightened with an open-end spanner.

In types C and CN, the button can be turned by 30° after retracting the plunger pin, holding it in the "retraced" position using the indexing lock.

see also...

- *List of Indexing Plunger Types → Page 884 ff.*
- *Distance Bushings GN 609.5 (to Limit the Thread Length) → Page 952*
- *Thin Hex Nuts GN 909 / GN 909.5 → Page 953*
- *Positioning Bushings GN 412.2 / GN 412.4 → Page 954*

How to order

GN 822.7-6-M12x1,5-CN (1 = 6, 2 = M12x1,5, 3 = CN)

1	d_1
2	d_2
3	Type